Recurrent Neural Networks

Besher Alkurdi

Table of contents

- Bag of Words Problems
- The RNN Idea
- Training RNNs
- The Vanishing Gradient Problem
- Sequence-to-Sequence
- Training Challenges

Bag of Words Problems

Predict This

The merchant traveled the Silk Road to ___

Damascus ✓

A Longer Sequence

I grew up in Syria

After finishing school, I developed a passion for marine biology and spent several years studying coral reef ecosystems in Australia. During that time, I also picked up rock climbing as a hobby and eventually summited three peaks in the Andes. I later moved to Canada to work at a technology startup focused on renewable energy solutions. My weekends were usually spent volunteering at a local animal shelter, where I helped train rescue dogs. I even published a small cookbook of Italian recipes I had collected from my travels across Tuscany.

My native language is ___

Arabic ✓

But how did you remember *Syria*?

Bag of Words

The Damascene merchant traded silk for Roman glass.

```
{the: 1, damascene: 1, merchant: 1, traded:
1, silk: 1, for: 1, roman: 1, glass: 1}
```

The Roman merchant traded silk for Damascene glass.

```
{the: 1, damascene: 1, merchant: 1, traded:
1, silk: 1, for: 1, roman: 1, glass: 1}
```

Same Representation

[1 1 1 1 1 1 1 1] [1 1 1 1 1 1 1 1]

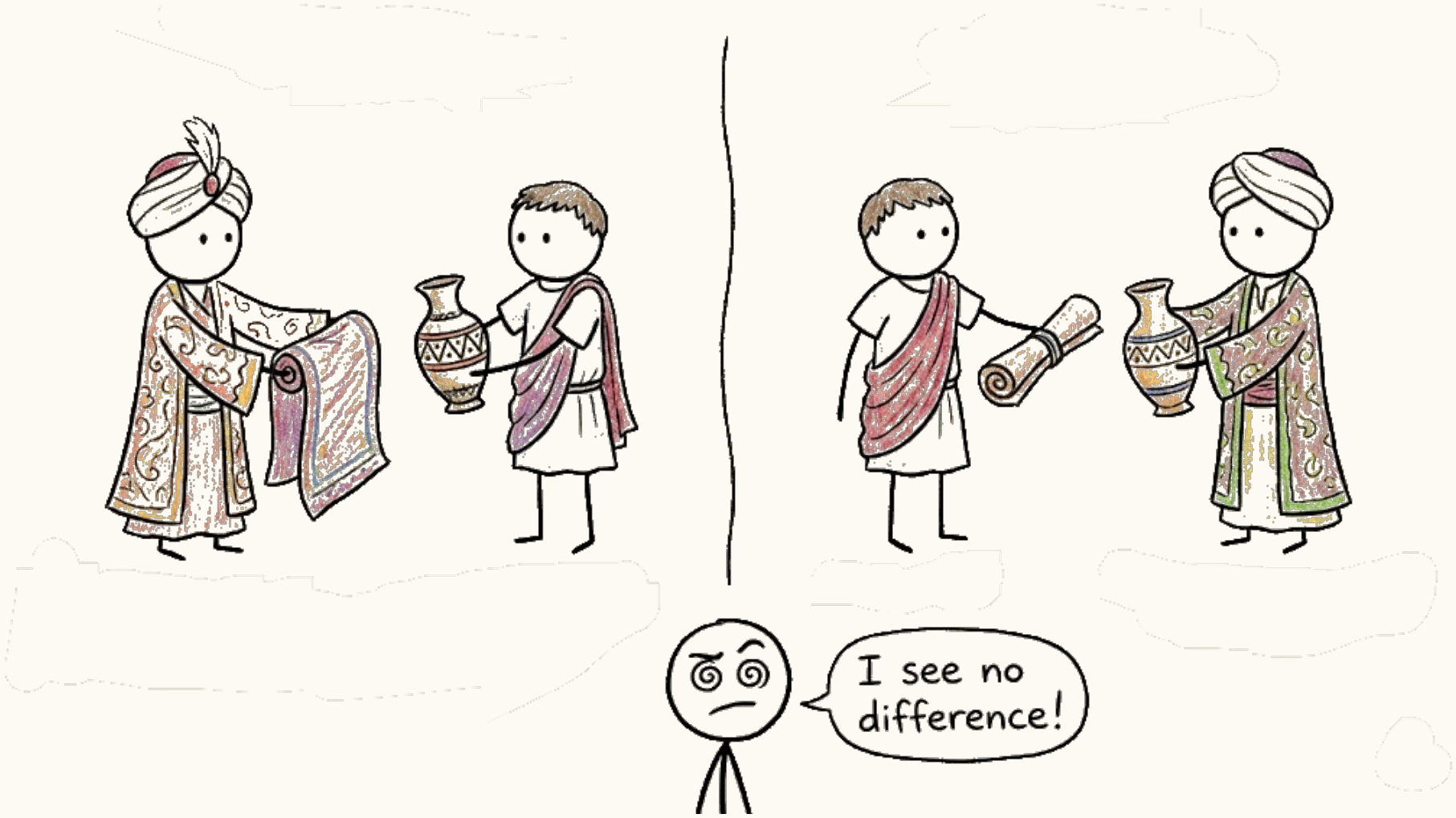

N-grams

in the heart of the night in the heart of the silence we wait

```
in - the : 2
the - heart : 2
heart - of : 2

of - the : 2
the - night : 1
night - in : 1

the - silence : 1
silence - we : 1
we - wait : 1
```

```
in - the : 1.00
the - heart : 0.50
heart - of : 1.00

of - the : 1.00
the - night : 0.25
night - in : 1.00

the - silence : 0.25
silence - we : 1.00
we - wait : 1.00
```

N-grams

the ___

$$P(___ \mid \text{the})$$

$$P(___ \mid \text{the heart})$$

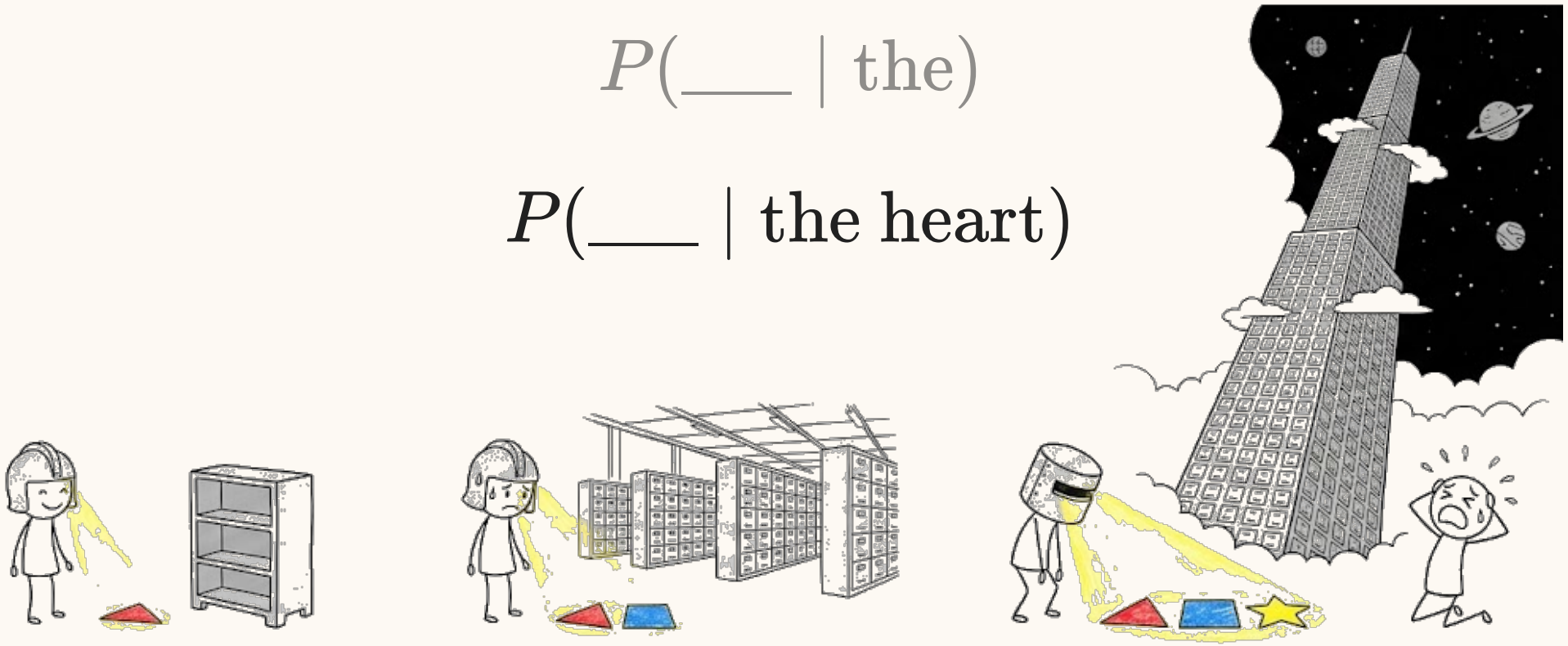

The RNN Idea

What If…

…we could process sequences of **any length** with **shared parameters**?

One Weight Matrix

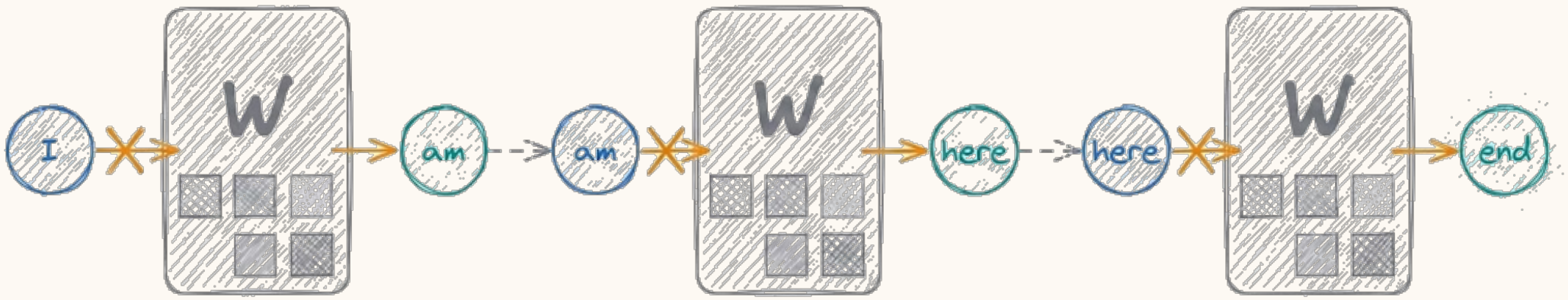

RNN

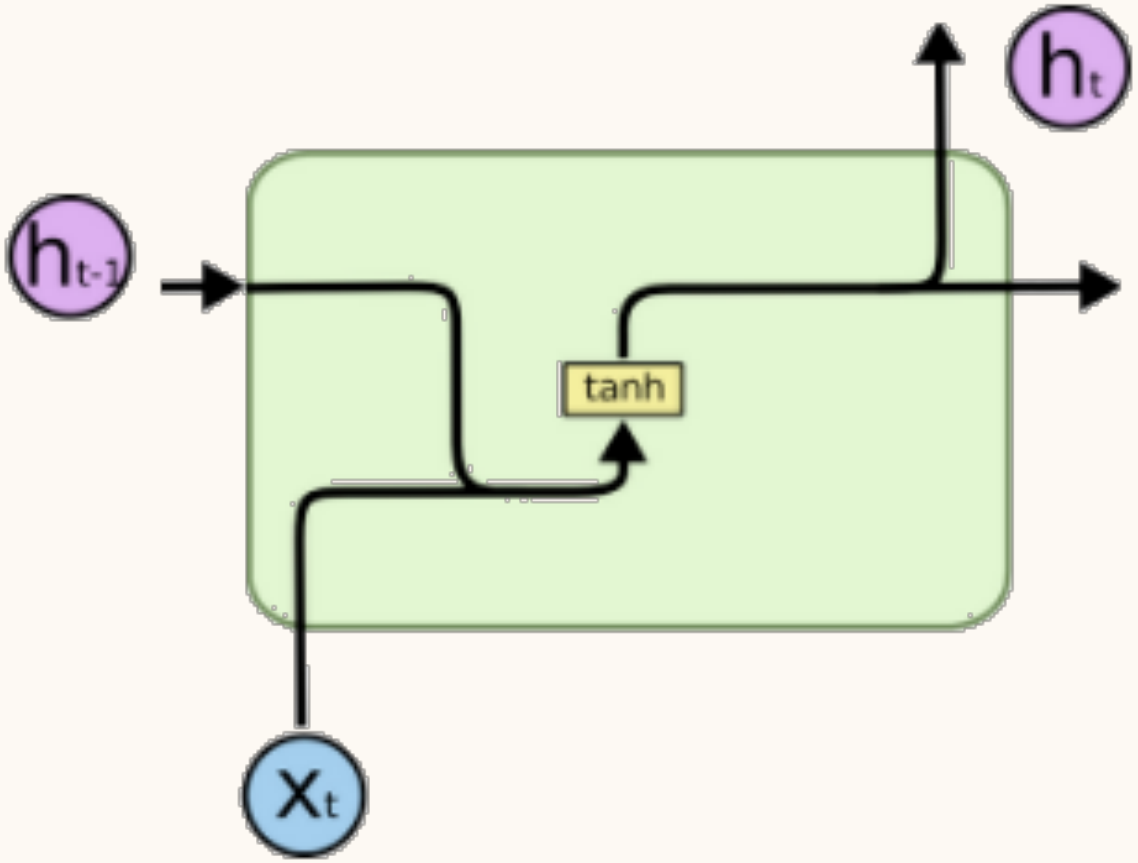

$$h_t = \tanh(W_{hh}h_{t-1} + W_{xh}x_t + b)$$

Training RNNs

Cross-Entropy Loss

$$\mathcal{L} = -\log P(y_{\text{true}} \mid y_{<t})$$

Perplexity

$$\text{PPL} = \exp(\text{Cross-Entropy})$$

- PPL = 1: Perfect
- PPL = |V|: Random guessing

In RNNs: More context → Lower perplexity

Remember this when we discuss Transformers.

The Vanishing Gradient Problem

A Simple Test

The clouds are in the **sky**

vs.

France… [50 words]… **French**

Can our model learn the second one?

The Gradient Chain

$$\frac{\partial \mathcal{L}}{\partial h_0} = \prod_{t=1}^{T} \frac{\partial h_t}{\partial h_{t-1}}$$

The Eigenvalue Problem

If $\lambda_{\max}$ is the largest eigenvalue of W_{hh}:

- $|\lambda_{\max}| < 1 \rightarrow$ **Vanish**
- $|\lambda_{\max}| > 1 \rightarrow$ **Explode**

Gradient Clipping

Two Methods

Clip by Value: Truncate each component

Clip by Norm (preferred): Scale entire vector

```
torch.nn.utils.clip_grad_norm_(params, max_norm=1.0)
```

Sequence-to-Sequence

Translation

“The cat sat” → “Le chat s’est assis”

How do we build this?

Encoder-Decoder

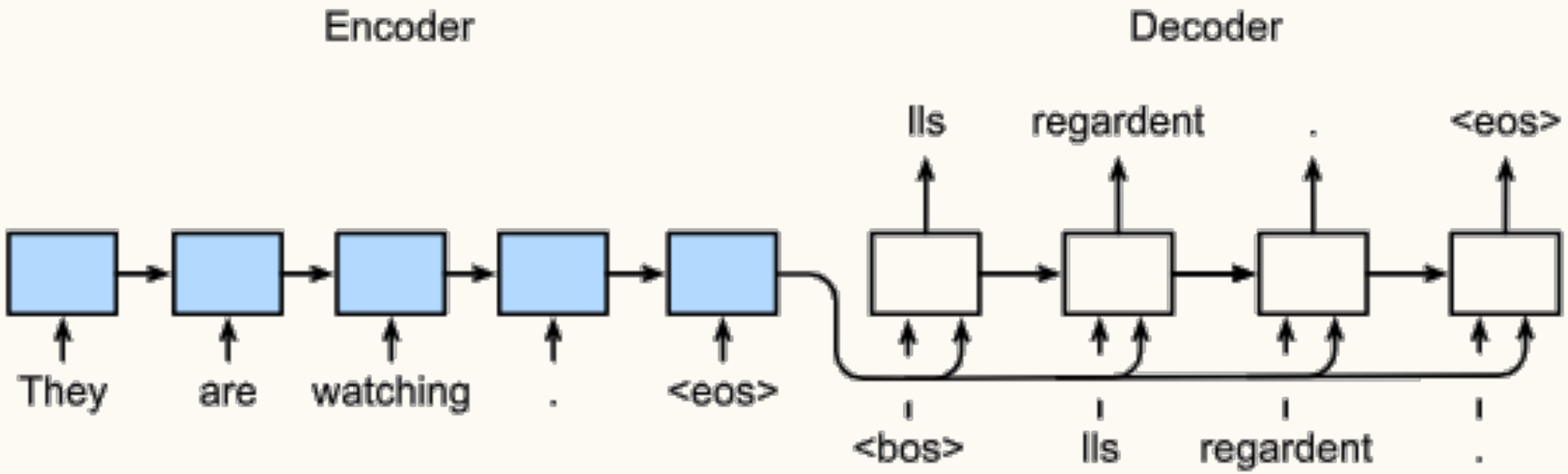

Training Challenges

How We Train

Teacher Forcing: Feed ground truth

Inference: Feed model predictions

These are different!

Exposure Bias

Model never learned to recover from its own mistakes.

Scheduled Sampling

Gradually mix ground truth with predictions…